PRECAUTIONS

- Read and understand all instructions before beginning installation.
- NOTICE: For installation by a licensed electrician in accordance with National and/or local Electrical Codes and the following instructions.
- Disconnect switch or a circuit breaker must be provided and marked as the disconnecting device.
- Disconnect switch / circuit breaker must be within reach of operator.
- CAUTION: RISK OF ELECTRICAL SHOCK. Turn power off at service panel before beginning installation. Never wire energized electrical components.
- CAUTION: USE COPPER CONDUCTOR ONLY
- Confirm device ratings are suitable for application prior to installation. Use of device in applications beyond its specified ratings or in applications other than its intended use may cause an unsafe condition and will void manufacturer's warranty.
- Use only approved materials and components (i.e. wire nuts, electrical box, etc.) as appropriate for installation
- NOTICE: Do not install if product appears to be damaged.

SAVE THESE INSTRUCTIONS!

If you have questions, call Current Lighting Control Service at: 1-877-584-2685 (LTG-CNTL) in the USA and Canada.

DESCRIPTION

The Modular Lighting Control System is a small network of relay panels and occupant control switches linked by a dataline. Together, these devices form a reconfigurable switching platform — one that uses "softwiring" instead of hardwiring to link occupant switches to relays. Scheduling capability can be readily added by simply adding a CLCDLS scheduler to the network.

The CLCINTxx is the interior for the Modular Lighting Control System Relay Panel.

The complete relay panel assembly will include the following:

1. Tub (CLCTUBxx)
2. Interior (CLCINTxx)
3. Power Supply (CLCXFRxxx)
4. Cover (CLCCOVxx)

This instruction sheet will describe:

1. Various components of the panel
2. Installation of the Relay Panel Interior
3. Initial set-up
4. Pushbutton programming/operation
5. Module replacement

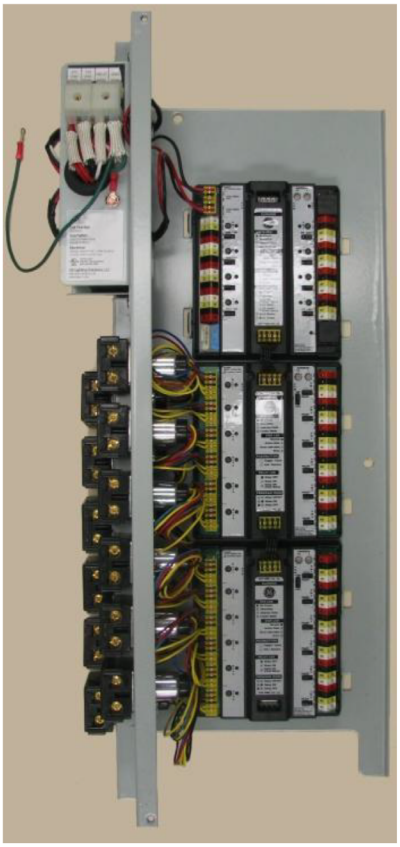

© 2023 Current Lighting Solutions, LLC. All rights reserved. Information and specifications subject to change without notice. All values are design or typical values when measured under laboratory conditions.

Relay Modules

CLCRMS6
- Addressable
- Controls up to six RR9 relays
- Local push button control of individual relays
- One direct switch input per relay
- LED status indicator for each relay
- LED SYS status indicator
- LED COM status indicator
- Four position header for connection of power and network to other modules (up to 8 total)

CLCRM6
- Addressable
- Controls up to six RR7 relays
- Local push button control of individual relays
- LED status indicator for each relay
- LED SYS status indicator
- LED COM status indicator
- Four position header for connection of power and network to other modules (up to 8 total)

CLCRMS6

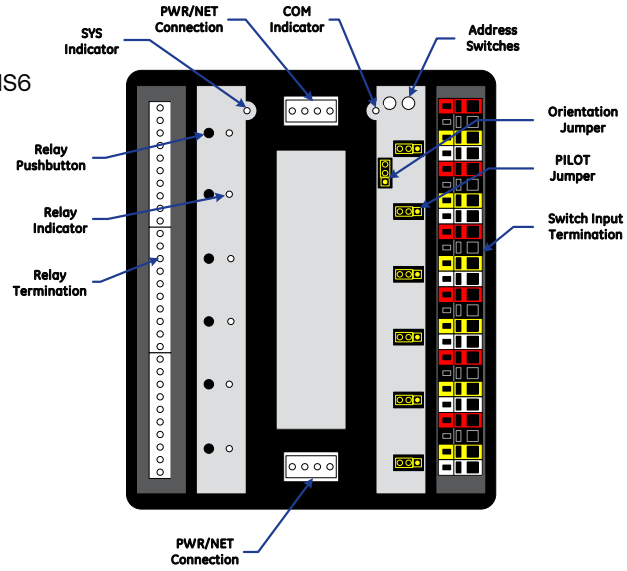

CLCRM6

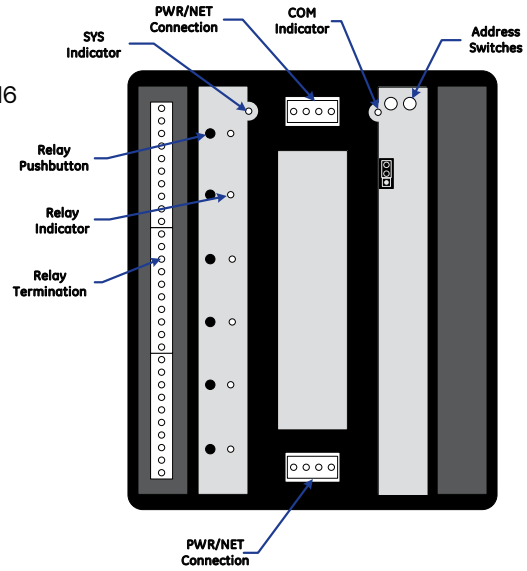

Non-program Mode LED Description	
LED	Description
SYS	• Solid Green – device is powered, running normally • Flashing Green – device upgrade in progress • Solid Yellow – panel address conflict • Flashing Yellow – network address conflict • Solid Red – supply voltage is low • Flashing Red – fault in device
COM	• Flashing Green – normal network traffic • Flashing Yellow – error with data • Flashing Red – communication error detected
Relay	• Solid Red – relay is energized

© 2023 Current Lighting Solutions, LLC. All rights reserved. Information and specifications subject to change without notice. All values are design or typical values when measured under laboratory conditions.

Group Switch/Power Injector Modules

CLCGSM8
- Addressable
- Control of up to 8 inputs (switches, photocell, motion)
- Scene programming
- Local push button control of individual groups
- Jumper for setting input to binary/analog
- Two RJ45 connectors for Power/Network in and out (remote devices, other panels)
- Connects power supply to system
- LED status indicator for each group
- LED SYS status indicator
- LED COM status indicator
- LED status indicators for IN and OUT
- Four position header for connection of power and network to other modules (up to 8 total)

CLCPIM
- Two RJ45 connectors for Power/Network in and out (remote devices, other panels)
- Connects power supply to system
- LED status indicators for IN and OUT
- Four position header for connection of power and network to other modules (up to 8 total)

CLCGSM8

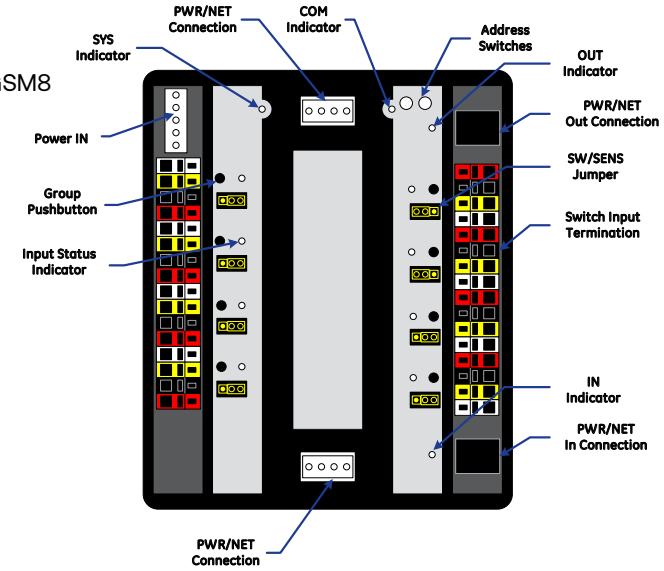

CLCPIM

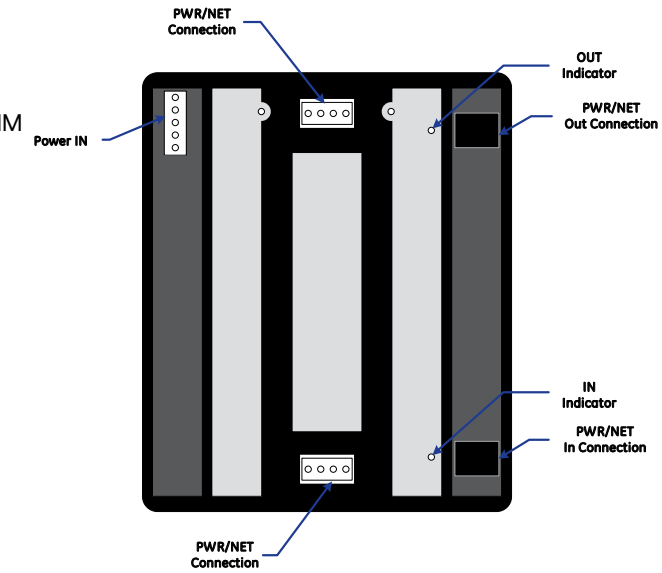

Non-program Mode LED Description	
LED	Description
* SYS	• Solid Green – device is powered, running normally • Flashing Green – device upgrade in progress • Solid Yellow – panel address conflict • Flashing Yellow – network address conflict • Solid Red – supply voltage is low • Flashing Red – fault in device
* COM	• Flashing Green – normal network traffic • Flashing Yellow – error with data • Flashing Red – communication error detected
IN/OUT	• Solid Green – below rated power of supply • Solid Yellow – at rated power of supply • Solid Red – exceeding rated power of supply • No color – no power is present (Network IN)
* INPUT STATUS	• Solid Red – outputs are on or match state of scene • Solid Green – not all of outputs are on or match the state of the scene • Repeat Fading Red/Green – all/some of the outputs are in flick warn mode

* CLCGSM8 only

© 2023 Current Lighting Solutions, LLC. All rights reserved. Information and specifications subject to change without notice. All values are design or typical values when measured under laboratory conditions.

Dimming Module

CLCDIM4
- Addressable
- Four photocell inputs
- Four 0-10V analog dimming outputs
- Two RJ45 connectors for Power/Network in and out (remote devices, other panels)
- Connects power supply to system (if installed in place of CLCGSM6 or CLCPIM)
- LED status indicator for enabled 0-10V output
- LED SYS status indicator
- LED COM status indicator
- Four position header for connection of power and network to other modules (up to 8 total)

CLCDIM4

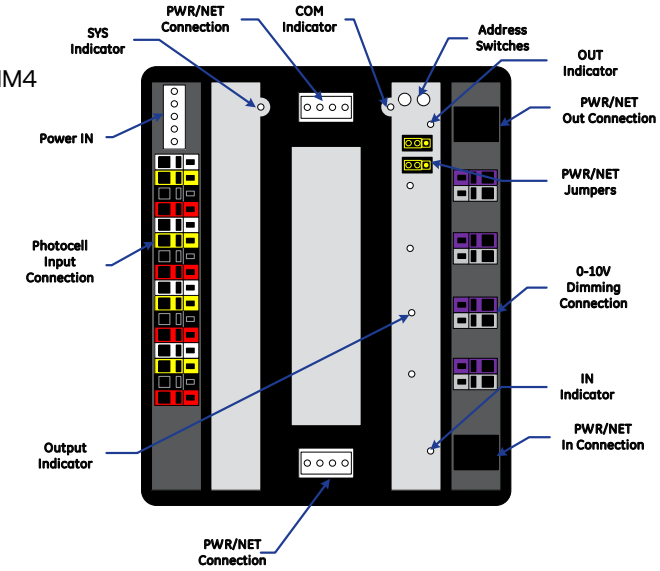

Non-program Mode LED Description	
LED	Description
SYS	• Solid Green – device is powered, running normally • Flashing Green – device upgrade in progress • Solid Yellow – panel address conflict • Flashing Yellow – network address conflict • Solid Red – supply voltage is low • Flashing Red – fault in device
COM	• Flashing Green – normal network traffic • Flashing Yellow – error with data • Flashing Red – communication error detected
IN/OUT	• Solid Green – below rated power of supply • Solid Yellow – at rated power of supply • Solid Red – exceeding rated power of supply • No color – no power is present (Network IN)
OUTPUT	• Red – dims to match 0-10V output state • No color – output is at zero

Photocell Types		
Control Type	Location	Photocell Model
Open Loop	Indoor	PCD-IN
	Atrium	PCD-ATR
	Sky	PCD-SKY
	Outdoor	PCD-OUT
Closed Loop	Indoor	RSEN-IN

© 2023 Current Lighting Solutions, LLC. All rights reserved. Information and specifications subject to change without notice. All values are design or typical values when measured under laboratory conditions.

Dataline Switch

CLCSWTx
- Addressable
- Capacitive touch
- Fits in standard NA electrical box
- 1, 2, 4 and 8 button configuration – reconfigurable in the field
- Programming “pad”
- LED status indicator for each switch position
- LED SYS/COM status indicator
- Two RJ45 connectors for Power/Network in and out

Front view

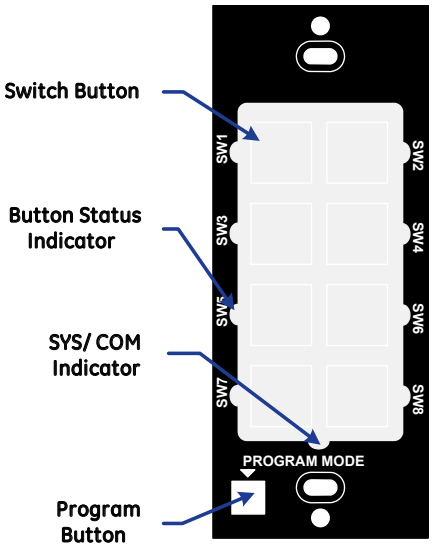

Non-program Mode LED Description	
LED	Description
SYS	• Solid Green – device is powered, running normally • Flashing Green – device upgrade in progress • Solid Yellow – panel address conflict • Flashing Yellow – network address conflict • Solid Red – supply voltage is low • Flashing Red – fault in device
Button	• Solid Red – outputs are on or match state of scene • Solid Green – not all of outputs are on or match the state of the scene • Repeat Fading Red/Green – all/some of the outputs are in flick warn mode

Rear view

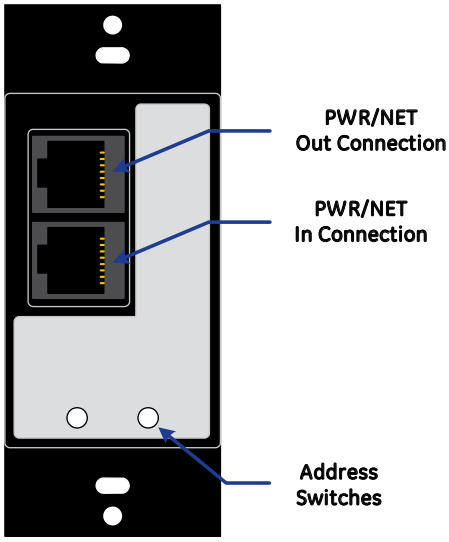

© 2023 Current Lighting Solutions, LLC. All rights reserved. Information and specifications subject to change without notice. All values are design or typical values when measured under laboratory conditions.

Dataline Scheduler

CLCDLS
- Addressable
- Touch screen
- Astronomical clock
- 8 weekly schedules with exceptions (single or reoccurring)
- 8 additional groups
- Can be used to configure system
- Two RJ45 connectors for Power/Network in and out

Front view

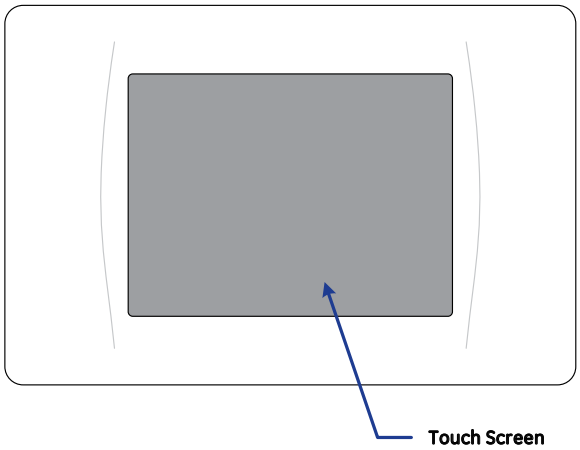

Rear view

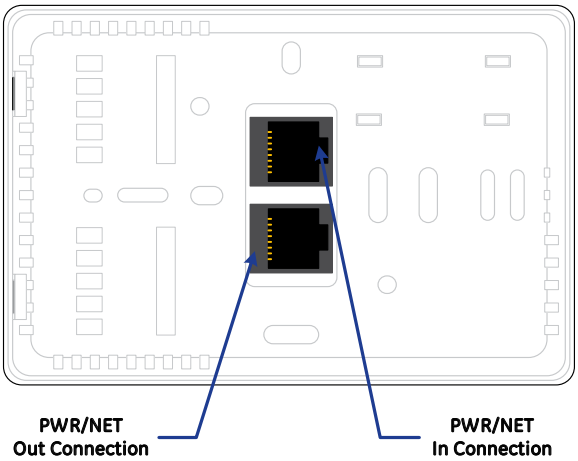

© 2023 Current Lighting Solutions, LLC. All rights reserved. Information and specifications subject to change without notice. All values are design or typical values when measured under laboratory conditions.

Bnet CONTROLLER

CLCBnet
- Programmable native BACnet® Building Controller
- Ethernet: 3-Port 10/1000 for BACnet IP, BACnet over Ethernet
- RS-485 port: BACnet MS/TP
- RS-232 port: BACnet PTP or TAP protocols
- Two USB Host Ports
- Two position for power connection
- Three position header for connection to module network
- Reset Button

Left side view

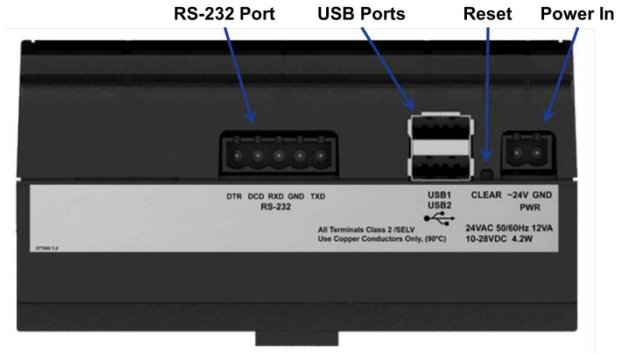

Right side view

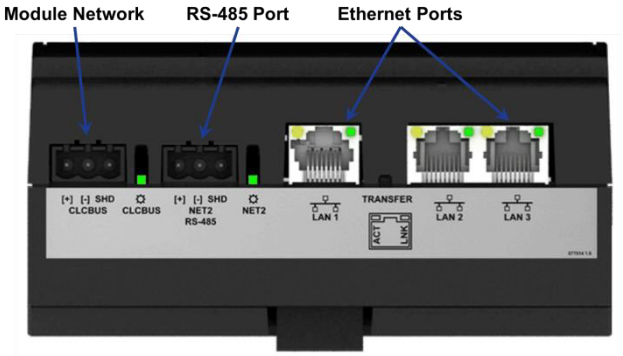

© 2023 Current Lighting Solutions, LLC. All rights reserved. Information and specifications subject to change without notice. All values are design or typical values when measured under laboratory conditions.

Relay Panel Installation

Figure 1

Dimension A	Standard	SS4x,PS4
CLCTUB12	23"	26"
CLCTUB24	38"	41"
CLCTUB36	49"	52"
CLCTUB48	60"	63"

Mains Conduit Size	
CLCTUB12	1.5"/2"
CLCTUB24	1.5"/2"
CLCTUB36	2"/2.5"
CLCTUB48	2"/2.5"

Low Voltage Conduit Size	
CLCTUBxx*	0.5"/0.75"

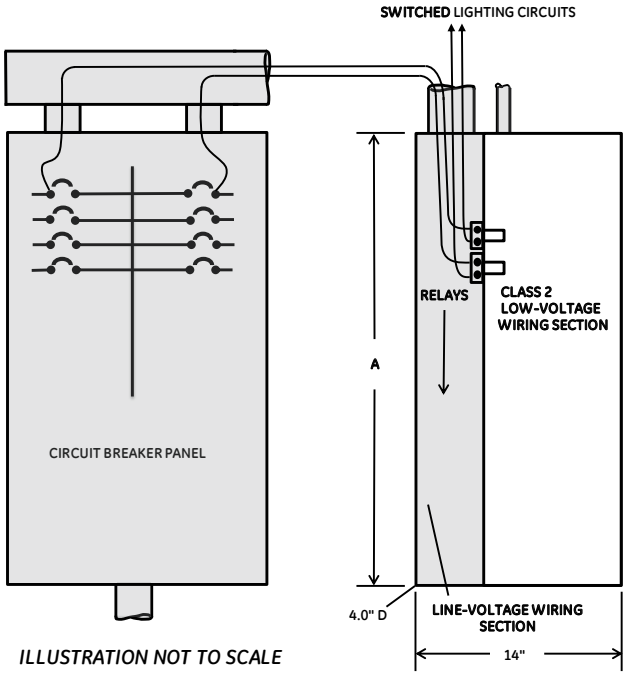

Rough-In Tub

Environment
- 12 Panel: 0°C to 40°C @30A per relay or 0°C to 50°C @25A per relay
- 24 Panel: 0°C to 40°C, 25A per relay
- 36/48 Panel: 0°C to 40°C, 20A per relay
- 0 to 90% relative humidity, stationary applications

Mounting
- The tub should be level, plumb and rigidly installed with hardware sufficient to hold 75 lbs. (34kg); 220 lbs. (100kg) minimum for SS4X, PS4. For multiple panels, allow 1⁄4" minimum between panels for showbox cover clearance.

Pulling Wires
- Route line-voltage wiring through the knockouts in either the top or bottom of the tub, using 10AWG THHN wire . Route Class 2 low voltage dataline from the remote switches or other low voltage controls through the knockouts in top or bottom of the tub. Refer to Figure 1 for conduit sizes. SS4X, PS4 required holes to be drilled or punched and conduit sealer must be used to prevent moisture or gases from entering the tub.

Install Interior

Power Supply
- Remove and discard shipping bracket from the top of the interior. Locate opening in the left side of the interior . Feed secondary wires (2 pairs of Red and Black leads in connector) through opening. Align two captive screws on power supply with swaged standoff in Interior. Tighten two screws to secure power supply. Plug in power supply connector to mating header on either the CLCGSM or CLCPIM. The label is marked "24VAC 50/60HZ" next to the connector. See Figure 2.

Interior
- Mount the interior in the tub and secure it to the studs with the hardware provided. Do not completely tighten hardware at this time. The cover secures to the interior in several locations. To align cover to tub and interior - the interior may need to be adjusted side-to-side. Connect power supply ground wire to the hole in tub using green 8-32 screw (Figure 3). Make sure that all line- and low-voltage wiring is confined to the appropriate areas. See addendum for installation of additional brackets when installing into SS4X or PS4 tubs.

Wire Line Voltage
- Before making any connections to the relays, make sure that none of the load circuits are shorted. Wire from the circuit breaker through each relay's SPST output terminals, and from there to the loads. Confirm that each circuit is wired to the relay specified in the drawings. Wire the power supply.

Figure 2

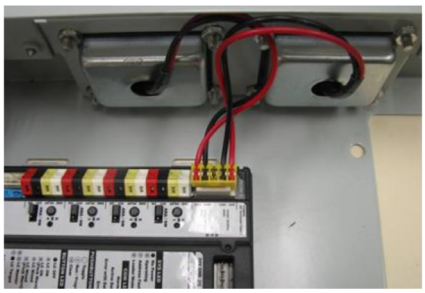

Figure 3

© 2023 Current Lighting Solutions, LLC. All rights reserved. Information and specifications subject to change without notice. All values are design or typical values when measured under laboratory conditions.

Initial System Setup

1. Ensure that each device in network has a unique address. The maximum number of addressable devices on the network is limited to 99.
2. Wire remote switch(s) to CLCRMS6 relay module(s). A small flat head screwdriver should be used to apply pressure to connector for wire insertion. Two locations can be used, front and back. Refer to Figure 4 for location and direction of pressure. Move jumper position if using “pilot” or “locator” switches. See Figure 5.
3. Wire remote switch(s) Figure 4, photocell(s), occupancy sensor(s) to CLCGSM8. Move jumper to correct position, dependent on type of input. For a switch or closed contact input, move jumper to “SW”. For photocell or occupancy sensor, move jumper to “SENS”. See Figure 6.
4. Wire photocell(s) Figure 4 to CLCDIM4. See Figure 7.
5. Wire 0-10V output(s) from dimming ballast/driver. Terminals are color coded:
   Violet = 0-10V output
   Gray = dimming return
6. Connect dataline switch(s) and/or dataline scheduler to the CLCGSM8/CLCPIM using CAT5 or higher UTP 4 pair 24AWG cable. The connection should start from the CLCGSM8/CLCPIM “PWR/NET OUT connection” and connect to the “IN” of the next device. Proceed from the “OUT” of that device in a daisy chain fashion to the remaining devices in the network. The length of the network is limited to 3,300 feet. The CLCGSM8/CLCPIM can connect up to eight CLCRM6/CLCRMS6 and the following combinations of CLCDLS and CLCSWTx:

CLCSWTx	CLCDLS
25	0
19	1
13	2
7	3
1	4

7. The network must be terminated on both ends. Install CLCTRM at both ends of the network.

Figure 5

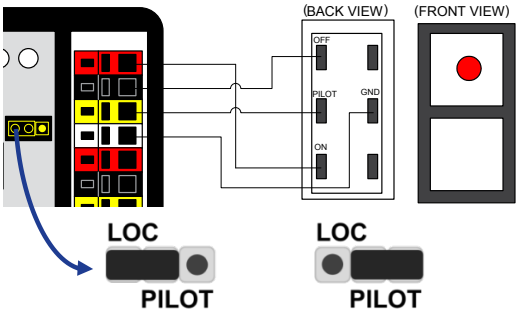

Figure 6

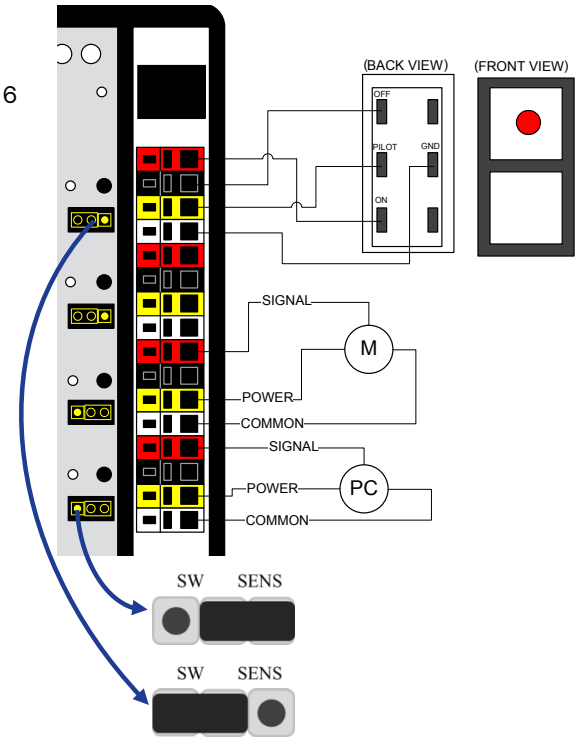

Figure 4
(Arrow indicates direction of applied pressure)

Figure 7

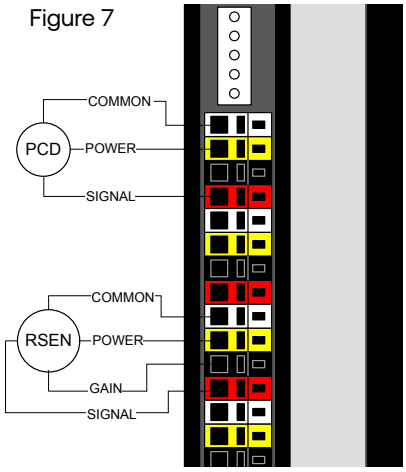

© 2023 Current Lighting Solutions, LLC. All rights reserved. Information and specifications subject to change without notice. All values are design or typical values when measured under laboratory conditions.

Install Line Voltage Cover

CLCTUBxxSS4X and CLCTUBxxPS4 tubs only

1. Mount the Line Voltage Cover included with the CLCTUBxxSS4X or CLCTUBxxPS4 as shown in Figure 8, to the right.

Install Tub Cover

Standard Tubs

1. Align mounting holes in cover with holes in tub and interior. If necessary, adjust interior side-to-side.
2. Tighten hardware securing interior to tub.

CLCTUBxxSS4X and CLCTUBxxPS4 Tubs

1. Mount the CLCCOVxxSS4X or CLCCOVxxPS4 cover using the hinge pins and Circlips provided as shown in Figure 9, to the right.

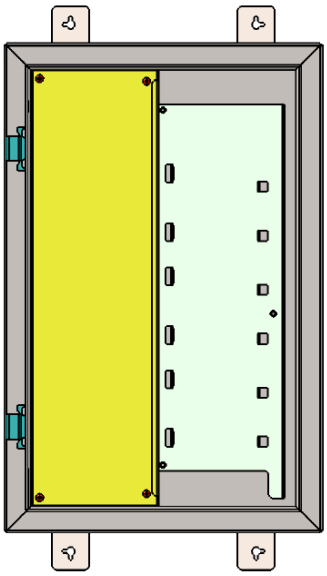

Figure 8

CLCTUBxxSS4X
CLCTUBxxPS4

Figure 9

Power Up and Test Relays

1. Apply power to the power supply only. As shown in Figure 10, to the right, press the Relay Pushbutton next to each relay's yellow plug-in termination to toggle it ON/ OFF. The relay should "click" and the Relay Indicator should change state. Confirm the operation by measuring the continuity at the line-voltage terminations of each relay.
2. Apply power to the relays. Being careful not to touch any line-voltage wiring, toggle each relay ON/OFF again and confirm that each relay controls the appropriate load.

Figure 10

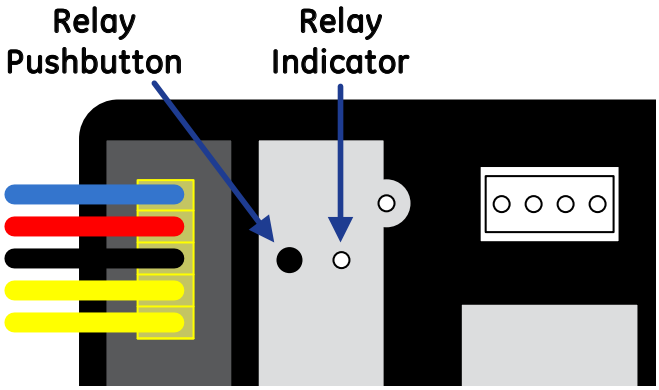

Document Relay Wiring

Record the circuit controlled by each relay on the RELAY SCHEDULE which was shipped with the interior.

RELAY SCHEDULE

PANEL # 01

RELAY #	SUPPLY	LOAD DESCRIPTION
-01	LP1-1	OPEN OFFICE – First Floor – NW
-02	LP1-2	OPEN OFFICE – First Floor - NW
-03	LP1-3	OPEN OFFICE – First Floor - NE
-04	LP1-4	OPEN OFFICE – First Floor - NE
-05	LP1-5	OPEN OFFICE – First Floor - SW

© 2023 Current Lighting Solutions, LLC. All rights reserved. Information and specifications subject to change without notice. All values are design or typical values when measured under laboratory conditions.

Pushbutton Programming

Group Switch Module Input

1. To enter programming mode, press and hold group pushbutton for desired input for > 2 seconds. The LED next to pushbutton will flash red.
2. To add a relay to control – press and hold relay pushbutton > 2 seconds. Input will default to on/off type control. Select the desired control type by pressing pushbutton (on/off, on only, off only). LED color indicates control type selected.
3. Repeat step 2 to add other relay(s) to be controlled by this input.
4. To remove a relay already programmed - press and hold pushbutton > 2 seconds.
5. To exit programming of input, press and hold group pushbutton for > 2 seconds.
6. To clear an input (remove all programming), press and hold group pushbutton for > 10 seconds.
7. To add input as a Target for another input in programming mode: press and hold group pushbutton for desired input for > 2 seconds. The LED next to pushbutton will flash green.

CLCRM6/CLCRMS6 Programming Mode LED Description	
LED Color	Control Type
Alternating Red/Green	Relay is ON/OFF controlled
Flashing Red	Relay can only be controlled ON
Flashing Green	Relay can only be controlled OFF
No Color	Relay is no longer controlled by input

Dataline Switch Button

1. Remove switch plate from switch.
2. Touch programming pad (lower left corner) for > 2 seconds. The SYS LED will flash red.
3. Press desired switch button to program. The LED next to button will flash color based on current programming status (see table).
4. To add a relay to control – press and hold pushbutton > 2 seconds. Input will default to on/off type control. Select the desired control type by pressing pushbutton (on/off, on only, off only). LED color indicates control type selected.
5. Repeat step 2 to add other relay(s) to be control by this button.
6. Touch programming pad for > 2 seconds.
7. Touch switch button being programmed.
8. To clear a switch button, touch programming pad for > 10 seconds. The SYS LED will flash yellow. Touch switch button.
9. To add switch button as a Target for another input in programming mode: touch programming pad for > 2 seconds. The SYS LED will flash green. Touch desired switch button to add as a target
10. Attach switch plate to switch.

CLCSWTx Switch Button Programming Mode LED Description	
LED Color	Control Type
Flashing Red	Button already has targets
Flashing Green	Button is a target of another input
Flashing Yellow	Button does not have assigned targets

Pushbutton Operation

Group Switch Module

Press and hold pushbutton for desired input for < 2 seconds. For a group in “off” or “mixed” (LED is green) mode, targets will be commanded “on”. For a group in “on” (LED is red) mode, targets will be commanded “off”.

Relay Module

Press the pushbutton for desired relay. The pushbutton will toggle the state of the

Dataline Switch Button

Touch the desired switch button. For a group in “off” or “mixed” (LED is green) mode, targets will be commanded “on”. For a group in “on” (LED is red) mode, targets will be commanded “off”.

© 2023 Current Lighting Solutions, LLC. All rights reserved. Information and specifications subject to change without notice. All values are design or typical values when measured under laboratory conditions.

CLCDLS Installation

1. Remove screw in tab of bracket (reference Figure 11).
2. Plug in Cat5 cables for PWR/NET IN and PWR/NET OUT (if required) on back of assembly (reference Figure 12). Make note of which cable is plugged in to each.
3. Route Cat5 cable(s) out of the top or bottom opening of bracket. Interior location will dictate the best option.
4. Slide assembly into interior (reference Figure 13). Note: the inward tabs (labeled 1 in Figure 12) are a blind fit into interior slots, whereas the outward tabs (labeled 2 in Figure 12) are visible.
5. Insert screw in hole of tab and tighten (Figure 14).
6. Plug in the Cat5 cable from the PWR/NET IN slot to either the PWR/NET OUT jack on the CLCGSM8, CLCPIM or CLCDIM4 (Figure 15).
7. Route and plug the Cat5 cable from PWR/NET OUT through the low voltage knockout to the next system member (if required).

Figure 11

Figure 12

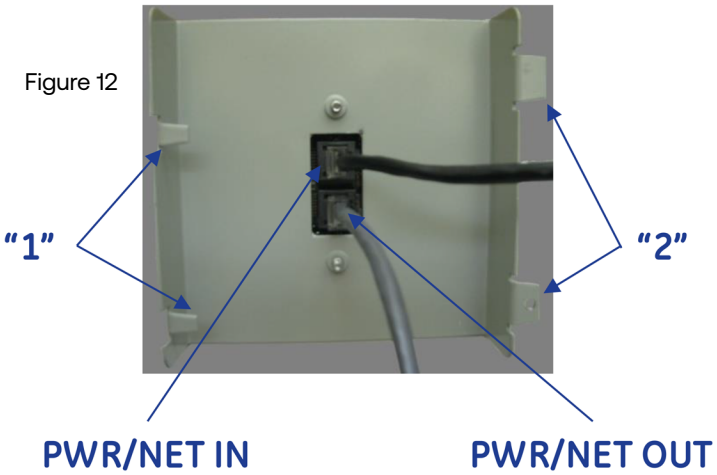

Figure 13

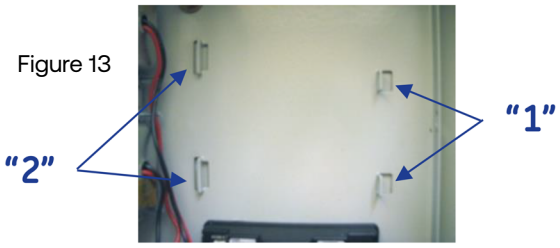

Figure 14

Figure 15

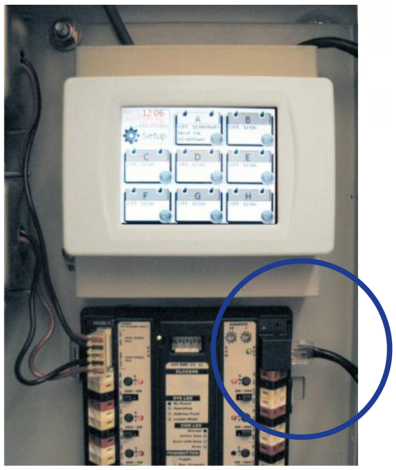

© 2023 Current Lighting Solutions, LLC. All rights reserved. Information and specifications subject to change without notice. All values are design or typical values when measured under laboratory conditions.

CLCBnet Installation

1. Remove screw in tab of bracket (reference Figure 16).
2. The CLCBnet module is shipped with a power/network cable. Plug in the two position power terminal to the lower left side of module (labeled “PWR”). Plug in the three position network terminal to the lower right side of module (labeled “CLCBUS”). Refer to Figure 17.
3. Slide assembly into interior (reference Figure 19). Note: the inward tabs (labeled 1 in Figure 18) are a blind fit into interior slots, whereas the outward tabs (labeled 2 in Figure 18) are visible.
4. Insert screw in hole of tab and tighten (Figure 20).
5. Plug in power/network cable to the 4 position header on either the CLCGSM8, CLCPIM or CLCDIM4 (Figure 21).
6. Connect other required cables to the CLCBnet module.

Figure 16

Figure 17

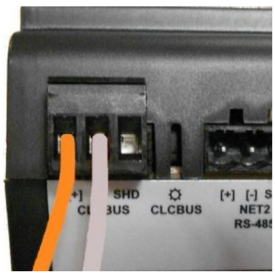

Figure 18

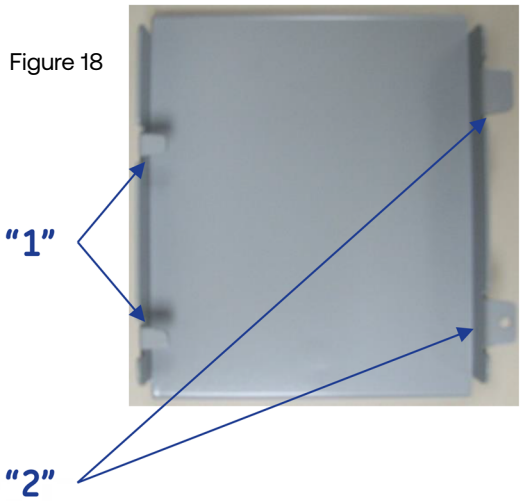

Figure 19

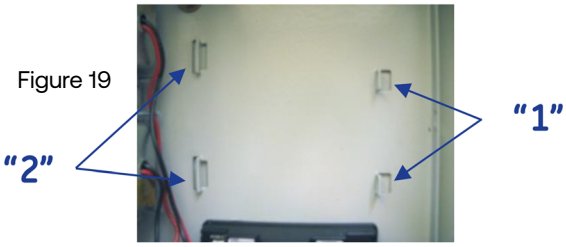

Figure 20

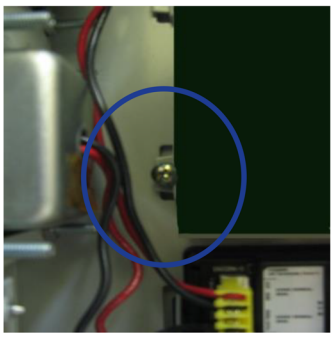

Figure 21

© 2023 Current Lighting Solutions, LLC. All rights reserved. Information and specifications subject to change without notice. All values are design or typical values when measured under laboratory conditions.

Module Replacement

Group Switch Module

1. Remove power supply plug (reference Figure 2).
2. Tag and remove wire(s) connected to switch input(s) (reference Figure 4).
3. Tag and remove dataline from PWR/NET connectors.
4. Pull up on module jumper (Figure 22) to remove.
5. Apply pressure to right side of module (Figure 23) – lift module from interior.
6. Insert new module – slide left side plastic tabs under sheet metal tabs (Figure 24), push down on right side to lock into place.
7. Set address to match removed module.
8. Install module jumper.
9. Connect dataline as noted in Step 3.
10. Reconnect wire(s) to switch input(s) as noted in Step 2.
11. Connect power supply plug to module (Figure 2).

Dimming Module

1. Depending on module location, either remove power supply plug (reference (Figure 2) or shorting plug.
2. Tag and remove wire(s) connected to photocell input(s) and dimming output(s) (reference Figure 4).
3. If applicable, tag and remove dataline from PWR/NET connectors.
4. Pull up on module jumper (Figure 22) to remove.
5. Apply pressure to right side of module (Figure 23) – lift module from interior.
6. Insert new module – slide left side plastic tabs under sheet metal tabs (Figure 24), push down on right side to lock into place.
7. Set address to match removed module.
8. Install module jumper.
9. If applicable, connect dataline as noted in Step 3.
10. Reconnect wire(s) to photocell input(s) and dimming output(s) as noted in Step 2.
11. Either connect power supply plug to module (Figure 2), or install shorting plug.

Relay Module

1. Pull up on module jumper(s) (Figure 22) to remove. Note: depending on module location, there may be two jumpers that need removed (top and bottom).
2. Pull up on connectors to disconnect relay connections from module (Figure 25).
3. If applicable, tag and remove wire(s) connected to switch input(s) (reference Figure 4).
4. Apply pressure to right side of module (Figure 23) – lift module from interior.
5. Insert new module – slide left side plastic tabs under sheet metal tabs (Figure 24), push down on right side to lock into place.
6. Set address to match removed module.
7. Reconnect wire(s) to switch input(s) as noted in Step 2.
8. Reconnect relay connections to module. Relays numbers are located on interior side.
9. Install module jumper(s).

Figure 22

Figure 23

Figure 24

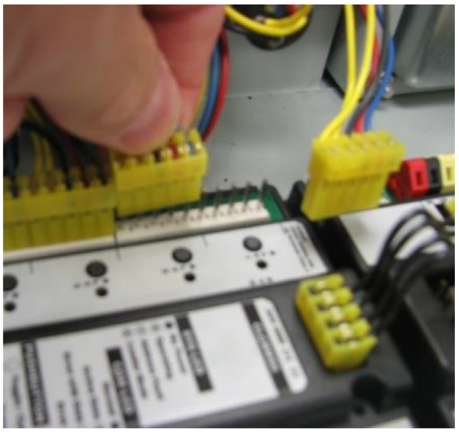

Figure 25

© 2023 Current Lighting Solutions, LLC. All rights reserved. Information and specifications subject to change without notice. All values are design or typical values when measured under laboratory conditions.

Separation Brackets Installation

Due to the larger size of the SS4x and PS4 tubs, brackets must be installed once the interior has been installed in order to maintain separation between the low voltage section and the line voltage section.

Locate Brackets

Locate the brackets, screws and nuts included with the CLCTUBxxSS4X or CLCTUBxxPS4. See Figure 26.

Install Brackets

Mount the brackets to the portion of the CLCINTxx that separates the low voltage and line voltage sections as shown in Figures 27 and 28.

Figure 26

Figure 27

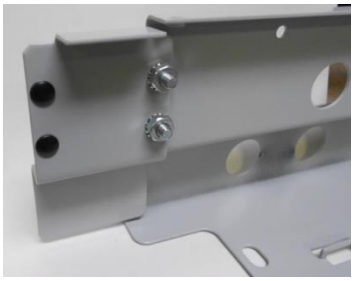

Figure 28

© 2023 Current Lighting Solutions, LLC. All rights reserved. Information and specifications subject to change without notice. All values are design or typical values when measured under laboratory conditions.