Cast Aluminum LED Exit Signs

Remote (Low Level) Exit Sign Installation Instructions

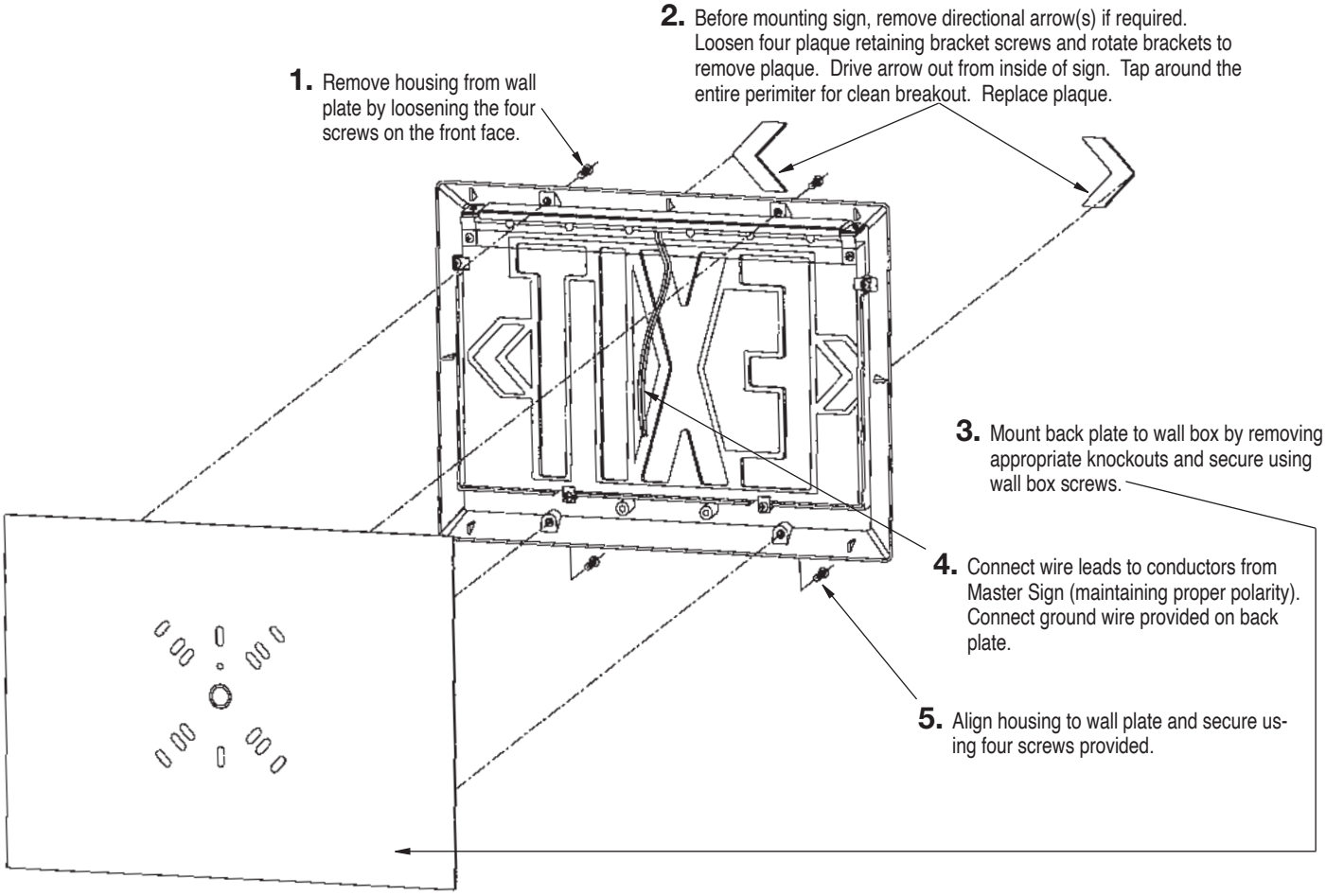

© 2022 HLI Solutions, Inc. All rights reserved. Information and specifications subject to change without notice. All values are design or typical values when measured under laboratory conditions.