Mounting Accessories

SURFACE MOUNT HANGERS

Surface Mount Hangers	Cat. No.	Description	For Use With
	ITB-4	Hanger for mounting close to ceiling on T-Bar grid system	All surface mounted fixtures
	CS-2	Ceiling spacer for mounting directly to outlet box. Used for mounting fixtures below combustible low density cellulose fiberboard ceilings. Maintains 1½" spacing.	All surface mounted fixtures
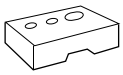	CS-4	All purpose spacer (1½" × 2¼" × 4"), maintains 1" spacing on any type of installation	All surface mounted fixtures
	CS-5	All purpose spacer with special T-Bar clip and stud for mounting to an inverted T-Bar ceiling. Maintains 1½" spacing.	All surface mounted fixtures
	CSZT	Zip tee hanger 1½" spacer. Designed for 15/16" wide T-Bars.	LCS, and LCL
	CSTH	Slide tong hanger for ungrooved channel. Maintains 1½" spacing.	LCS, and LCL
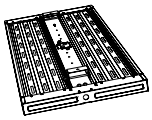	LHVTH	Slide tong hanger with ⅞" hole.	LHA

CHAIN AND CABLE HANGERS

Chain and Cable Hangers	Cat. No.	Description	For Use With
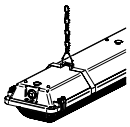	XEHC	Chain mount kit includes 14" chain and triangular metal bail for attachment to standard surface mount bracket.	LXEM
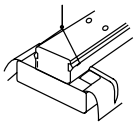	CSHC	Chain hanging assembly includes two 14" lengths of chain and two hanger hooks.	LCS, and LCL
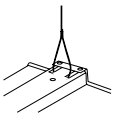	GLH5 GLH10 GLH20	Cable hangers, #2 size cable with loop-end, 5', 10', and 20' lengths, adjustable	All industrials
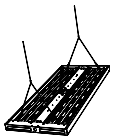	LHVQM5 LHVQM10 LHVQM20	Y-Fit Hook Cable Hangers, #2 size cable, 5', 10', and 20' lengths, adjustable	LHA, LLHV and PEL
	CM24 CM48	Single point mount cable with canopy kit, pair. (Feed and non-feed ends) 24" or 48" with barrell adjuster. See also Columbia Mounting Accessories for MPS, RLB and RLW.	Various
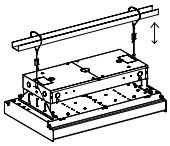	LWSQM5 LWSQM10	Aircraft cable pair with paddles, 5' and 10' lengths	LWS, CHB and MPL

© 2023 HLI Solutions, Inc. All rights reserved. Information and specifications subject to change without notice. All values are design or typical values when measured under laboratory conditions.

Mounting Accessories

PENDANT/STEM MOUNTING ACCESSORIES

Pendant/Stem Mounting	Cat. No.	Description	For Use With
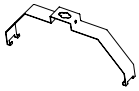	XEDPM	Kit contains two brackets for pendant hanging with 3⁄8" threaded rod by others. No drilling of housing is required.	LXEM
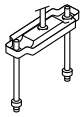	S18D	Double canopy (2) 18" stems	All 4' LRO and LPT
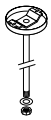	S18	Swivel canopy, one 18" stem - all white finish, 8° swivel	Individual or continuous row mounting of most surface and industrial fixtures
	SS18	Swivel canopy, one 18" stem - all white finish, 45° swivel	

© 2023 HLI Solutions, Inc. All rights reserved. Information and specifications subject to change without notice. All values are design or typical values when measured under laboratory conditions.

Mounting Accessories

FLANGE KITS

Flange kits are extruded aluminum frames that act as individual fixture T-Bar frames to support the weight of any G (grid) trim recessed fixture in drywall or plaster ceilings. Kits snap together without the use of tools (18 gauge galvanized corner clips provided) and are hung by tie wire (by others) from the ceiling support structure.

From the room side flange kits mimic the appearance of T-Bars in a baked white enamel finish. Consult chart for ceiling cut out dimension.

For continuous row applications order flange kits plus one FKCR, continuous row flange connector kit, for each joint between fixtures.
(One less than the number of fixtures in the row.)

Flange Kit		Ceiling Opening	
Catalog No.	Size	Width	Length
FK14	1' × 4'	12⅜"	48⅜"
FK22	2' × 2'	24⅜"	24⅜"
FK24	2' × 4'	24⅜"	48⅜"
FK44	4' × 4'	48⅜"	48⅜"
FK81	8" × 1'	8⅜"	12⅜"
FK82	8" × 2'	8⅜"	24⅜"
FK84	8" × 4'	8⅜"	48⅜"

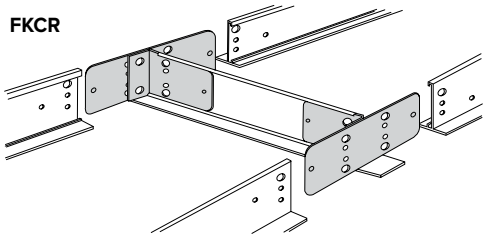

FLANGE KIT INSTALLATION INSTRUCTIONS

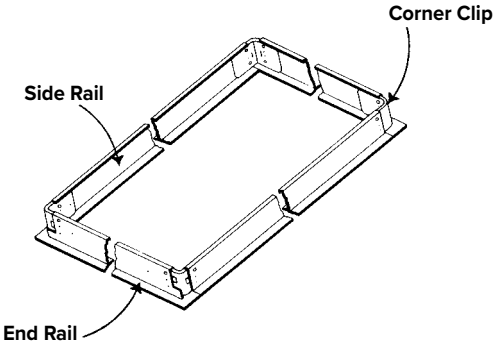

1. Cut ceiling opening to proper dimensions. Slip fit corner clips into side and end rails. No tools are required.

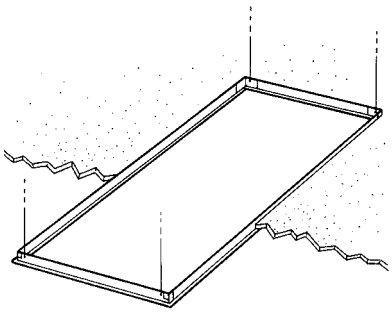

2. Place Flange Kit in ceiling opening and wire each corner to ceiling structure. Pull up tight against ceiling.

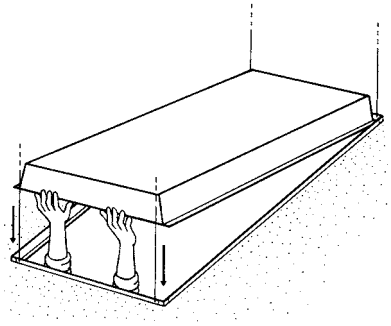

3. Place grid trim troffer in Flange Kit.

CONTINUOUS ROW CUTOUT DIMENSIONS

Row cut out dimensions using FK14s & FKCR adapters:
Width 12 ⅜", Length [48" × (# in row)] + ⅜".
Example: (48" × 2) + ⅜" = 96 ⅜"

Row cut out dimensions using FK22s & FKCR adapters:
Width 24 ⅜", Length [24" × (# in row)] + ⅜".
Example: (24" × 2) + ⅜" = 48 ⅜"

Row cut out dimensions using FK24s & FKCR adapters:
Width 24 ⅜", Length [48" × (# in row)] + ⅜".
Example: (48" × 2) + ⅜" = 96 ⅜"

© 2023 HLI Solutions, Inc. All rights reserved. Information and specifications subject to change without notice. All values are design or typical values when measured under laboratory conditions.

Mounting Accessories

REFLECTORS

SYMMETRIC REFLECTORS

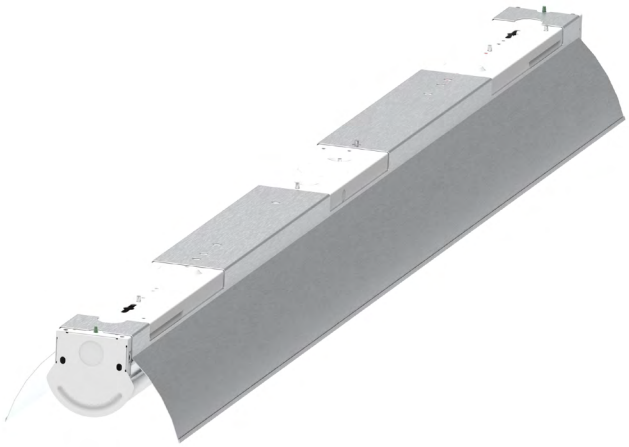

ASYMMETRIC REFLECTORS

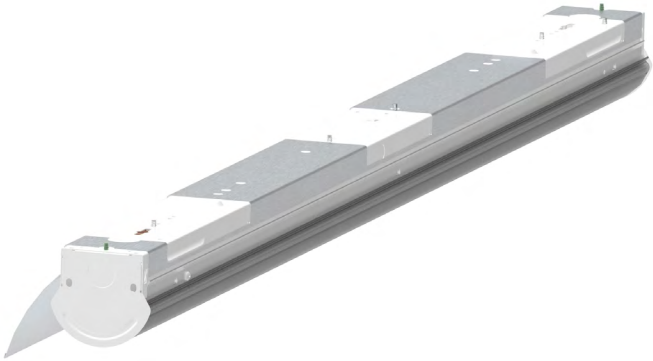

© 2023 HLI Solutions, Inc. All rights reserved. Information and specifications subject to change without notice. All values are design or typical values when measured under laboratory conditions.