EXO OUTDOOR LIGHTING

DATE: LOCATION:

TYPE: PROJECT:

CATALOG #:

BULLHORN BRACKET

POLE TOP BRACKET

FEATURES

- Steel construction
- Available for 2, 3, or 4 luminaires
- Available in 5 standard colors
- Available for pole tops with 2 3/8", 2 7/8", or 4" outside dimensions

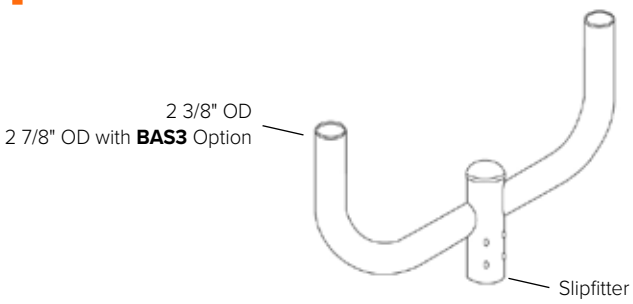

RELATED PRODUCTS

Spoke Bracket

Square Bracket

ORDERING GUIDE

Example: BHH–2-180–PT20–DB

CATALOG # _____

BHH – _____ – _____ – _____ – _____

Model		Configurations		Pole Tenon Size		Color		Options	
BHH	Bullhorn Bracket	**2–180**	2–180	**PT20**	2" pipe tenon (2.38" O.D.)	**DB**	Dark bronze textured	**BAS3**	3" SLEEVE (For luminaires requiring a 3" slipfit)
		2H–180	2H–180	**PT25**	2.5" pipe tenon (2.88" O.D.)	**BL**	Black textured		
		3–180	3–180	**PT35**	3.5" pipe tenon (4.0" O.D.)	**WH**	White textured		
		4–180	4–180			**GR**	Gray textured		
		3–120	3–120			**PS**	Platinum silver smooth		
		4–90	4–90						

ORDERING INFORMATION

TENON TYPE BRACKETS (STEEL)

(order as separate part #, field installed)

Catalog Number	Description	Max allowable load per tenon	Bracket EPA, MAX.	Bracket weight, MAX
BHH-2-180	Twin	100 lbs (45.5 kg)	0.9 ft2 (.08 m2)	25 lbs (11.4 kg)
BHH-2H-180	Twin Horizontal	60 lbs (27.2 kg)	0.5 ft2 (.05 m2)	25 lbs (11.4 kg)
BHH-3-180	3-in-line	100 lbs (45.5 kg)	1.5 ft2 (.14 m2)	38 lbs (17.3 kg)
BHH-4-180	4-in-line	100 lbs (45.5 kg)	2.2 ft2 (.20 m2)	51 lbs (23.2 kg)
BHH-3-120	3 @ 120	100 lbs (45.5 kg)	1.2 ft2 (.11 m2)	40 lbs (18.2 kg)
BHH-4-90	4 @ 90	100 lbs (45.5 kg)	1.3 ft2 (.12 m2)	41 lbs (18.2 kg)

© 2022 HLI Solutions, Inc. All rights reserved. Information and specifications subject to change without notice. All values are design or typical values when measured under laboratory conditions.

EXO
OUTDOOR LIGHTING

DATE: LOCATION:

TYPE: PROJECT:

CATALOG #:

BULLHORN BRACKET

POLE TOP BRACKET

DIMENSIONS

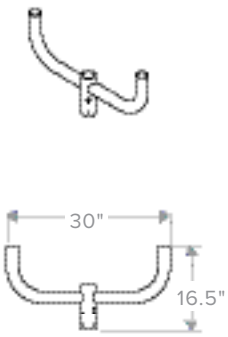

BHH–2–180

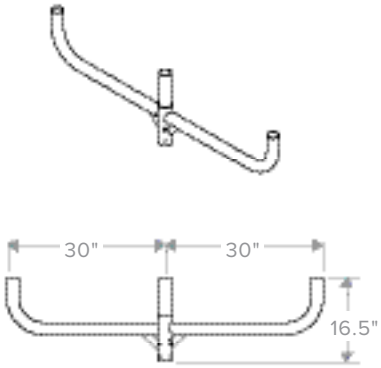

BHH–3–180

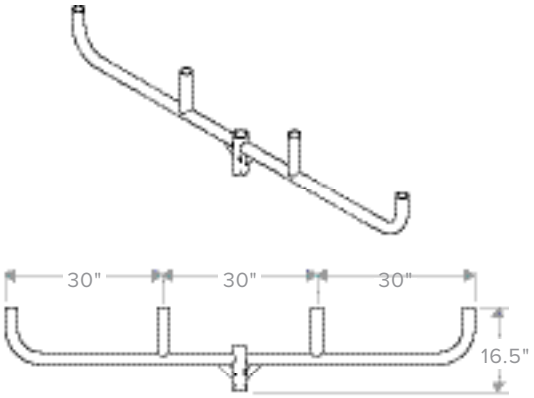

BHH–4–180

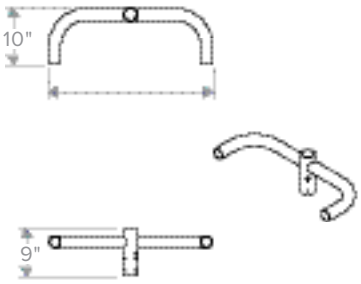

BHH–2H–180

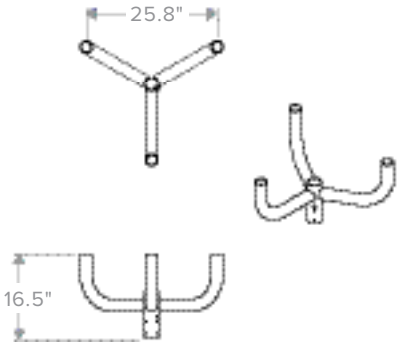

BHH–3–120

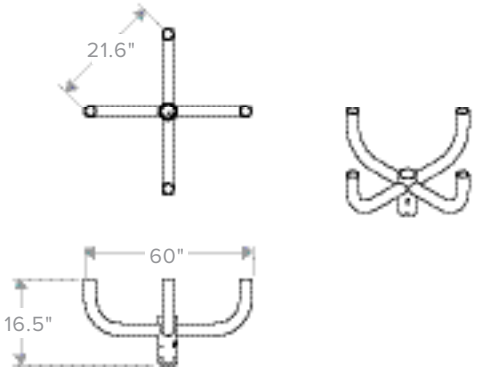

BHH–4–90

© 2022 HLI Solutions, Inc. All rights reserved. Information and specifications subject to change without notice. All values are design or typical values when measured under laboratory conditions.