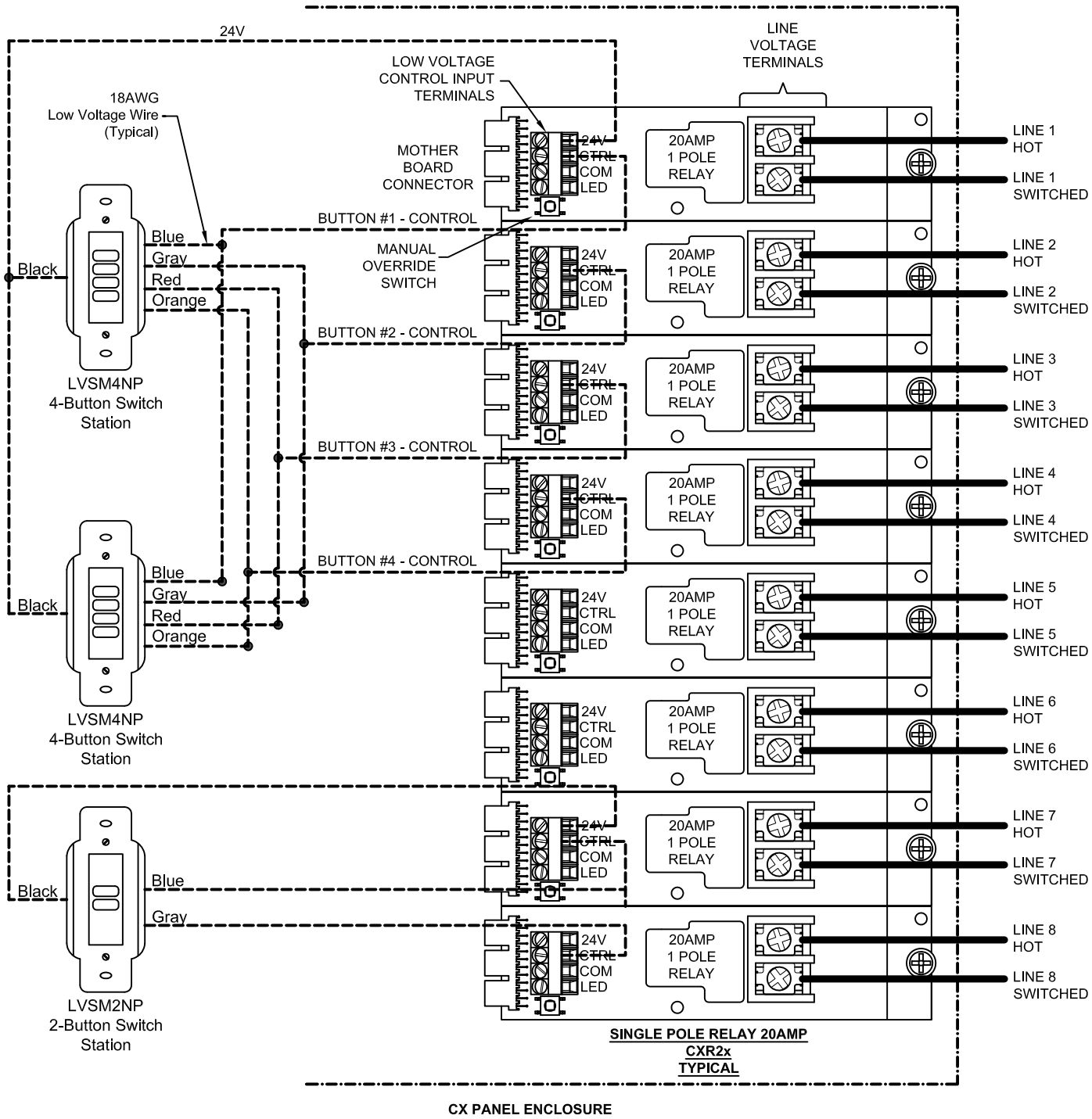

NOTE:

Power down CX Panel prior to addition and removal of components.

LEGEND

Low Voltage Wire

Line Voltage Wire

CX Panel with 20 AMP Single Pole Relays Using 2 - 4 Button Low Voltage Switches and a 1 - 2 Button Switch

HUBBELL Control Solutions

(888) 698-3242
(512) 450-1100

9601 Dessau Rd. - Bldg 1
Austin, Tx 78754

THIS DOCUMENT AND SPECIFICATIONS DESCRIBED WITHIN ARE THE EXCLUSIVE PROPERTY OF HUBBELL CONTROL SOLUTIONS ISSUED IN THE STRICTEST CONFIDENCE, AND SHALL NOT BE REPRODUCED, COPIED OR USED WITHOUT PRIOR WRITTEN PERMISSION.